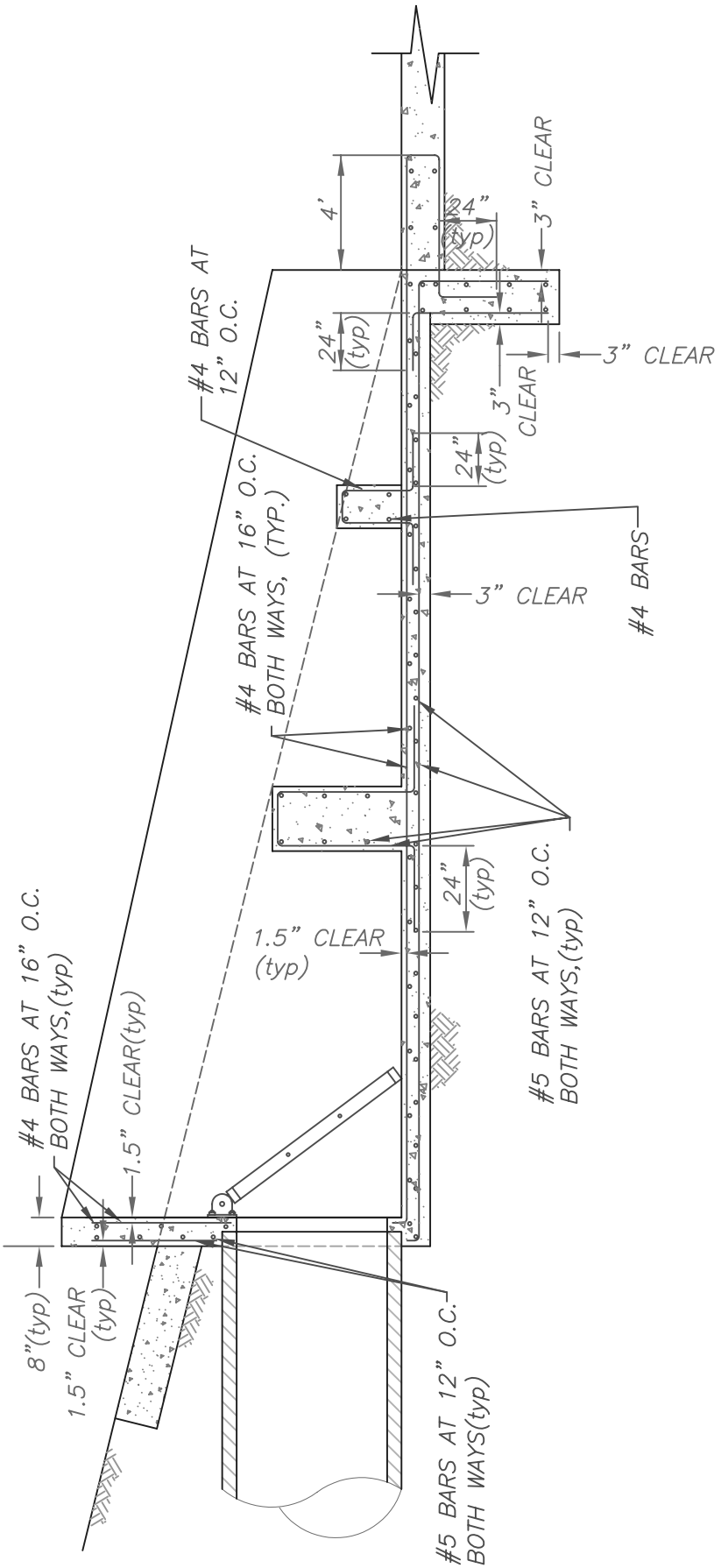

REBAR DETAIL

NOT TO SCALE

STORM DRAIN BASIN OUTLET STRUCTURE	REF. & REV. MARCH 2005	CITY OF MADERA SD-2F